BD|SENSORS
pressure measurement

DMK 458

Pressure Transmitter for Marine and Offshore

Ceramic Sensor

accuracy according to IEC 61298-2:
standard: 0.25 % FSO
option: 0.1 % FSO

Nominal pressure

from 0 ... 40 mbar up to 0 ... 20 bar

Output signals

2-wire: 4 ... 20 mA
others on request

Product characteristics

- LR-certificate (Lloyd´s Register)
- DNV-approval
- ABS-certificate
  (American Bureau of Shipping)
- CCS-certificate
  (China Classification Society)
- diaphragm ceramics Al_2O_3 99.9 %
- high overpressure resistance
- excellent long term stability

Optional versions

- IS-version
  Ex ia= intrinsically safe for gases
- pressure port in CuNiFe
  (sea water resistant)

The pressure transmitter DMK 458 has been developed for marine and offshore applications. In addition to thread connections, different flush versions are available, which are especially suitable for pasty, viscous, and polluted media.

Due to the capacitive ceramic sensor developed by BD|SENSORS the DMK 458 shows an outstanding accuracy as well as a high overload and temperature resistance.

Preferred areas of use are

- Monitoring of pressure during loading and unloading processes
- Monitoring of a ship´s position and draught
  Use in anti-heeling systems
  Water and sea water
- Level measurement in ballast and storage tanks

BD SENSORS GmbH
BD-Sensors-Straße 1
D - 95199 Thierstein

Tel.: +49 (0) 92 35 / 98 11- 0
Fax: +49 (0) 92 35 / 98 11- 11

www.bdsensors.de
info@bdsensors.de

Pressure ranges																
Nominal pressure [1]	[bar]	0.04	0.06	0.1	0.16	0.25	0.4	0.6	1	1.6	2.5	4	6	10	16	20
Level	[mH_2O]	0.4	0.6	1	1.6	2.5	4	6	10	16	25	40	60	100	160	200
Overpressure	[bar]	2	2	4	4	6	6	8	8	15	25	25	35	35	45	45
Permissible vacuum	[bar]	-0.2		-0.3		-0.5				-1						

[1] available in gauge and absolute; nominal pressure ranges absolute from 1 bar

Output signal / Supply		
Standard	2-wire: 4 ... 20 mA / V_S = 9 ... 32 V_{DC}	$V_{S\ rated}$ = 24 V_{DC}
Option IS-version	2-wire: 4 ... 20 mA / V_S = 14 ... 28 V_{DC}	$V_{S\ rated}$ = 24 V_{DC}
Performance		
Accuracy [2]	standard: ≤ ± 0.25 % FSO	option for p_N ≥ 0.6 bar [3]: ≤ ± 0.1 % FSO
Permissible load	$R_{max} = [(V_S - V_{S\ min}) / 0.02\ A]\ \Omega$	
Long term stability	≤ ± 0.1 % FSO / year at reference conditions	
Influence effects	supply: 0.05 % FSO / 10 V	load: 0.05 % FSO / kΩ
Turn-on time	700 msec	
Mean response time	< 200 msec	mean measuring rate 5/sec
Max. response time	380 msec	

[2] accuracy according to IEC 61298-2 – limit point adjustment (non-linearity, hysteresis, repeatability)
[3] under the influence of disturbance burst according to EN 61000-4-4 (2004) +2 kV accuracy decreases on ≤ ± 0.25 % FSO

Thermal effects (offset and span)	
Tolerance band	≤ ± 1 % FSO
In compensated range	-20 … 80 °C
Permissible temperatures	
Medium	-40 ... 125 °C
Electronics / environment	-25 … 85 °C
Storage	-40 ... 100 °C
Electrical protection	
Short-circuit protection	permanent
Reverse polarity protection	no damage, but also no function
Electromagnetic compatibility	emission and immunity according to - EN 61326 - DNV
Mechanical stability	
Vibration	4 g (according to DNV: Class B, curve 2 / basis: IEC 60068-2-6)
Materials	
Pressure port	standard: stainless steel 1.4404 (316 L) option: CuNi10Fe1Mn (sea water resistant) - only for G1/2" open pressure port and in combination with housing in CuNi10Fe1Mn (not possible with field housing) -
Housing	standard: stainless steel 1.4404 (316 L) option: CuNi10Fe1Mn (sea water resistant) - only in combination with pressure port in CuNi10Fe1Mn -
Option field housing (not possible with CuNi10Fe1Mn)	stainless steel 1.4404 (316L) cable gland: absolute, sealed gauge: brass, nickel plated gauge: polyamide (with integrated pressure reference)
Cable sheath for option cable outlet	TPE -U (flame-resistant, halogen free, increased resistance against oil and gasoline, resistant against salt, sea water, heavy oil)
Seals (media wetted)	FKM others on request
Diaphragm	ceramics Al_2O_3 99.9 %
Media wetted parts	pressure port, seals, diaphragm
Category of the environment	
Lloyd´s Register (LR)	EMV1, EMV2, EMV3 [4], EMV4 number of certificate: 13/20055
Det Norske Veritas (DNV)	temperature: D vibration: B number of certificate: TAA00001GR humidity: B enclosure: D electromagnetic compatibility: B

[4] not valid for IS-version (DX14A-DMK 458)

Explosion protection	
Approval DX14A-DMK 458	IBExU 07 ATEX 1180 X field housing: zone 0: II 1G Ex ia IIC T4 Ga ISO 4400, M12x1, cable outlet: zone 0: II 1G Ex ia IIB T4 Ga
Safety technical maximum values	U_i = 28 V; I_i = 93 mA; P_i = 660 mW; L_i = 5 µH C_i = 105 nF; C_{GND} = 140 nF opposite housing
Permissible temperatures for environment	in zone 0: -20 ... 60 °C with p_{atm} 0.8 bar up to 1.1 bar zone 1 and higher: -25 ... 70 °C
Permissible temperatures for medium	-40 ... 85 °C

Miscellaneous	
Ingress protection	IP 65, IP 67, IP 68
Installation position	any
Current consumption	max. 21 mA
Weight	min. 400 g (depending on housing and mechanical connection)
Operational life	100 million load cycles
CE conformity	EMC Directive: 2014/30/EU
ATEX Directive	2014/34/EU

Wiring diagram

2-wire-system (current)

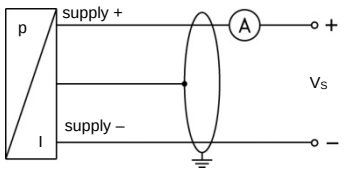

Pin configuration

Electrical connection	ISO 4400	field housing (clamp section: 2.5 mm²)	M12x1 (4-pin), metal	cable colours (IEC 60757)
	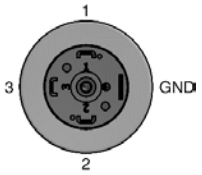	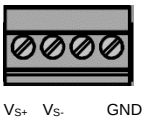	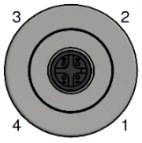	
Supply + Supply –	1 2	V_S+ V_S-	1 2	WH (white) BN (brown)
Shield	ground pin ⏚	GND	4	GNYE (green-yellow)

Electrical connections (dimensions mm / in)

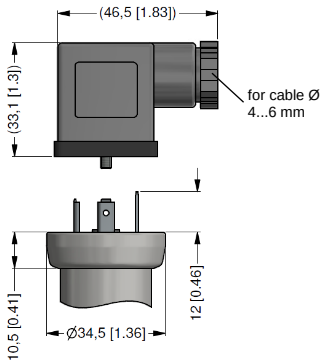

ISO 4400 - **code G10**
(IP 65)

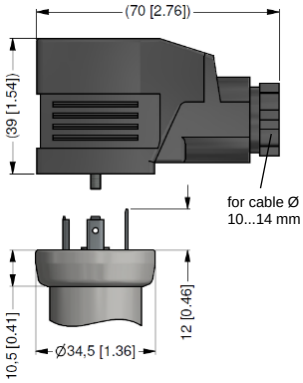

ISO 4400 - **code G00**
(IP 65)

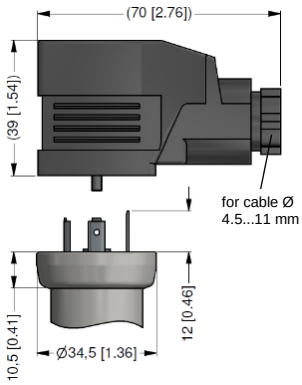

ISO 4400 - **code G01**
(IP 65)

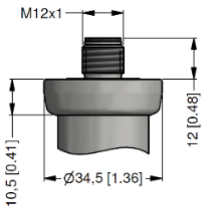

M12x1 4-pin
(IP 67)

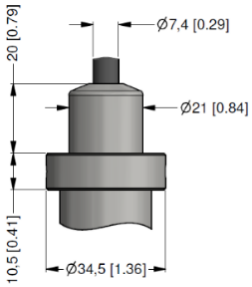

cable outlet [5]
(IP 68)

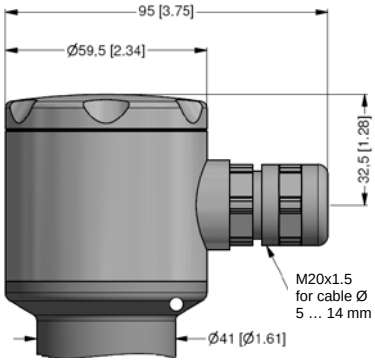

field housing
(IP 67)

[5] *cable versions are delivered with shielded cable (different lengths available);*
for gauge pressure cable with ventilation tube required; tested at 4 bar or 40 mH$_2$O for 24 hours

Dimensions (mm / in)

plug versions

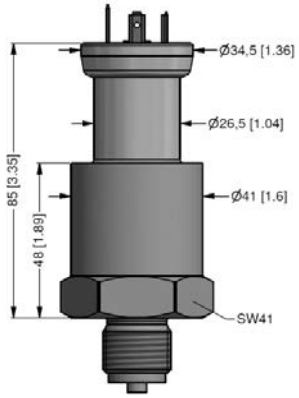

cable outlet

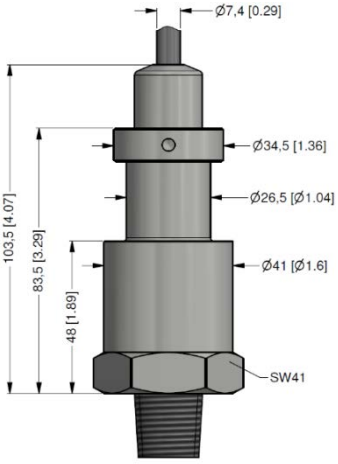

field housing

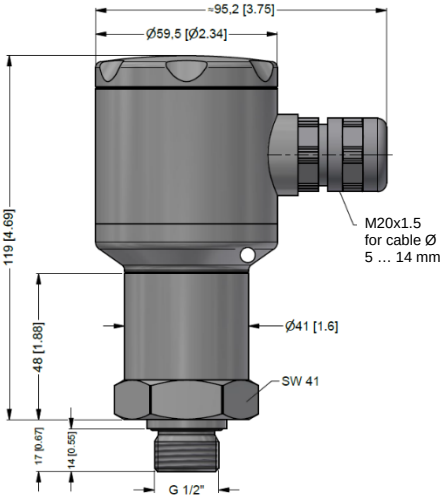

Mechanical connections (dimensions mm / in)

flanges

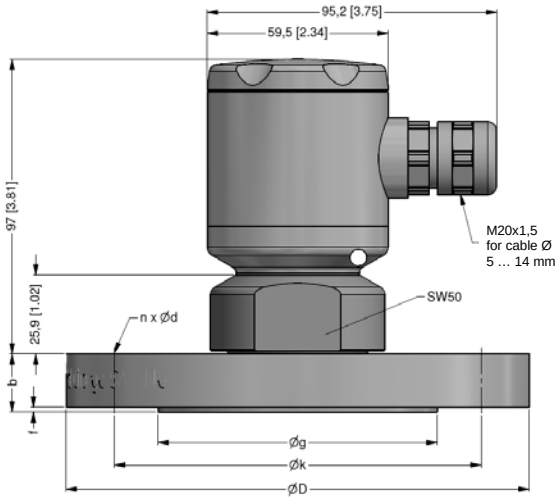

flange with field housing

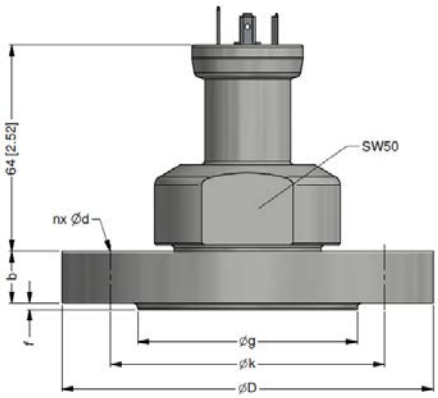

flange with plug version and cable outlet

dimensions in mm						
size	DIN 2501				ANSI	
	DN25/PN40	DN40/PN40	DN50/PN40	DN80/PN16	2"/150 lbs	3"/150 lbs
b	18	18	20	20	19.1	23.9
d	14	18	18	18	19.1	19.1
D	115	150	165	200	152.4	190.5
f	2	3	3	3	2	2
g	68	88	102	138	91.9	127
k	85	110	125	160	120.7	152.4
n	4	4	4	8	4	4
p_N [bar]	≤ 40	≤ 40	≤ 40	≤ 16	≤ 10	≤ 10

inch threads

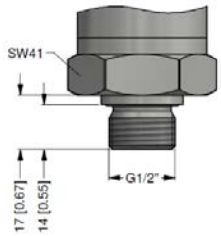

G1/2" 3852

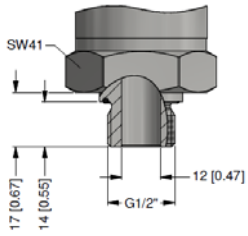

G1/2" DIN 3852
open port

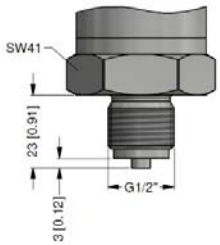

G1/2" EN 837

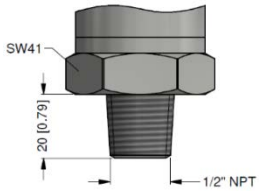

1/2" NPT

© 2026 BD|SENSORS GmbH – The specifications given in this document represent the state of engineering at the time of publishing. We reserve the right to make modifications to the specifications and materials.

Tel.: +49 (0) 92 35 / 98 11- 0
Fax: +49 (0) 92 35 / 98 11- 11

www.bdsensors.de
info@bdsensors.de

Ordering code DMK 458

DMK 458 □□□-□□□□-□-□-□□□-□□□-□-□-□-□□□

Pressure																																				
in bar, gauge				5	9	A																														
in bar, absolute [1]				5	9	B																														
in mH_2O, gauge				5	9	C																														
in mH_2O, absolute [1]				5	9	D																														consult
Input	**[mH_2O]**	**[bar]**																																		
	0.4	0.04					0	4	0	0																										
	0.6	0.06					0	6	0	0																										
	1.0	0.1					1	0	0	0																										
	1.6	0.16					1	6	0	0																										
	2.5	0.25					2	5	0	0																										
	4.0	0.40					4	0	0	0																										
	6.0	0.60					6	0	0	0																										
	10	1.0					1	0	0	1																										
	16	1.6					1	6	0	1																										
	25	2.5					2	5	0	1																										
	40	4.0					4	0	0	1																										
	60	6.0					6	0	0	1																										
	100	10					1	0	0	2																										
	160	16					1	6	0	2																										
	200	20					2	0	0	2																										
		customer					9	9	9	9																										consult
Output																																				
4 … 20 mA / 2-wire											1																									
intrinsic safety 4 … 20 mA / 2-wire											E																									
		customer									9																									consult
Accuracy																																				
standard:		0.25 % FSO										2																								
option for $p_N \geq 0{,}6$ bar:		0.1 % FSO										1																								
		customer										9																								consult
Electrical connection																																				
male and female plug ISO 4400 (for cable Ø 4 … 6 mm)													G	1	0																					
male and female plug ISO 4400 GL [2] (for cable Ø 10 … 14 mm)													G	0	0																					
male and female plug ISO 4400 GL [2] (for cable Ø 4.5 … 11 mm)													G	0	1																					
male plug M12x1 (4-pin) / metal version													M	1	0																					
cable outlet with TPE-U-cable [3] (with ventilation tube)													T	R	3																					
field housing stainless steel 1.4404 (316L)													8	8	0																					
		customer											9	9	9																					consult
Mechanical connection																																				
G 1/2" DIN 3852																1	0	0																		
G 1/2" EN 837																2	0	0																		
1/2" NPT																N	0	0																		
G1/2" DIN 3852 open pressure port																H	0	0																		
flange DN 25 / PN 40 (DIN 2501)																F	2	0																		
flange DN 40 / PN 40 (DIN 2501)																F	2	2																		
flange DN 50 / PN 40 (DIN 2501)																F	2	3																		
flange DN 80 / PN 16 (DIN 2501) [4]																F	1	4																		
flange DN 2" / 150 lbs (ANSI B 16.5) [4]																F	3	2																		
flange DN 3" / 150 lbs (ANSI B 16.5) [4]																F	3	3																		
		customer														9	9	9																		consult
Seal																																				
FKM																			1																	
andere																			9																	consult
Pressure port																																				
stainless steel 1.4404 (316L)																					8															
copper-nickel-alloy (CuNi10Fe1Mn) [5]																					K															
		customer																			9															consult
Diaphragm																																				
ceramics Al_2O_3 99.9 %																							C													
		customer																					9													consult
Special version																																				
		standard																									0	0	0							
		customer																									9	9	9							consult

[1] nominal pressure ranges absolute from 1 bar
[2] female plug is GL-approbated
[3] shielded TPE-U-cable with ventilation tube available in different lengths
[4] DN80/PN16 possible for nominal pressure ranges $p_N \leq 16$ bar; 2"/150 lbs and 3"/150 lbs possible for nominal pressure ranges $p_N \leq 10$ bar
[5] CuNi10Fe1Mn only in combination with G 1/2" open pressure port (code H00); not possible with field housing (code 880)

16.12.2024

© 2024 BD|SENSORS GmbH - The specifications given in this document represent the state of engineering at the time of publishing. We reserve the right to make modifications to the specifications and materials.

BD|SENSORS GmbH
BD-Sensors-Straße 1
D - 95199 Thierstein

Tel.: +49 (0) 92 35 / 98 11- 0
Fax: +49 (0) 92 35 / 98 11- 11

www.bdsensors.de
info@bdsensors.de